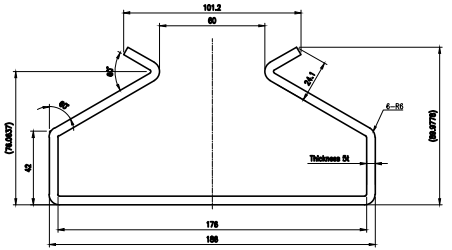
101.2
80
67°
45°
26.1
6-R6
(76.6027)
(86.5776)
42
Thickness 5t
176
188

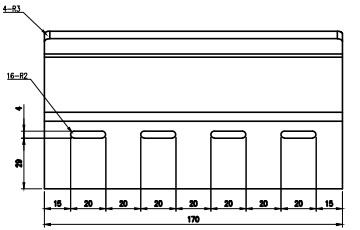
4-R3
16-R2
4
29
15
20
20
20
20
20
20
20
15
170

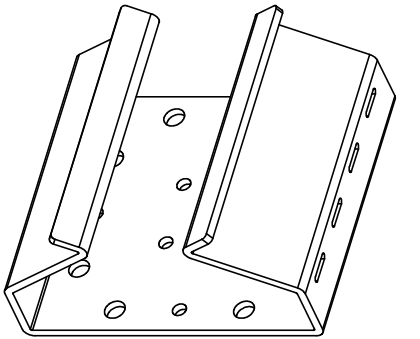

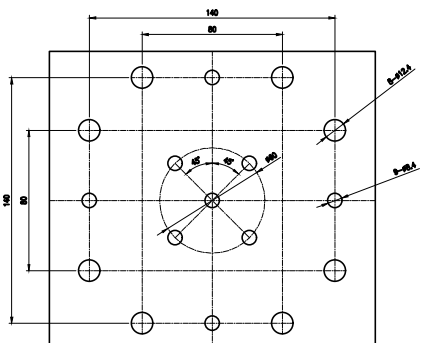
140
80
8-Φ12.4
8-Φ9.4
45°
45°
Φ80
140
80